GVT060A-12

120-277V Constant Voltage 60W LED Driver 4-in-1 Dimming

Product family features

— Supports Triac dimming (at 120Vac only)

— Supports 0-10V/PWM/Rx dimming

— Built-in active power factor correction

— Self-contained wiring chamber design

— 5-year warranty, 10-year service life

— Suitable for dry and damp environments

— Acc. to UL, FCC

— CLASS 2 output

Product family benefits

— Flicker-free

— High efficiency, low THD

— Surge protection: L-N: 2KV L/N-PE: 2KV

Typical applications

— For home and commercial lighting

— For office and decorative lighting

Product parameters

— Output current 5A

— Output power 0-60W

— Input voltage 108–305Vac

— Output voltage 12Vdc

— Efficiency 90%

Electrical data

Input data

Rated AC input voltage	120 ... 277V (Triac DIM at 120Vac only)	
AC voltage range	108 ... 305V	
Mains frequency	50/60Hz	
Power factor	≥0.95@120Vac	
Efficiency	88%@120Vac	90%@277Vac
Input current	0.7A Max	
Inrush current	50A 150uS@120Vac	120A 150uS@277Vac
Loading number on circuit breaker 10 A (B)	9	5
Loading number on circuit breaker 10 A (C)	9	8
Loading number on circuit breaker 16 A (B)	15	8
Loading number on circuit breaker 16 A (C)	15	13
Protective conductor current	≤3.5mA	
Leakage current	≤0.7mA	
THD	≤15%@120Vac	

Output data

Nominal output voltage	12V
Voltage tolerance	±5%
Nominal output current	0... 5A
Maximum output power	60W
Nominal output power	0... 60W
Dimming depth	1%[1)]
Flicker	According to IEEE Std 1789-2015
CIE SVM	≤0.4
IEC-Pst	≤1
Temperature drift	±5%
Start-up time	<3S [2)]

Safety

Withstanding voltage	I/P-O/P: 3.75kV&5mA&60s; I/P-DIM+/DIM-, DIM+/DIM-/ -O/P, I/P-PE, O/P-PE: 1.5kV&5mA&60s
Surge capability (L-N)	2 kV
Surge capability (L-N/PE)	2 kV
Insulation resistance	I/P&O/P, I/P&DIM+/DIM-, DIM+/DIM-&O/P: >100MΩ@500Vdc
Lifetime	Up to 100,000 hours (for details, please refer to the service life table)
Guarantee	5 years [3)]

1) Triac dimming performance depends on the dimmer
2) Typical 1s, reaches >90% within <3 seconds @120Vac
3) 5 years@Tc≤80℃ (176℉)

Characteristic diagrams

Efficiency vs Load

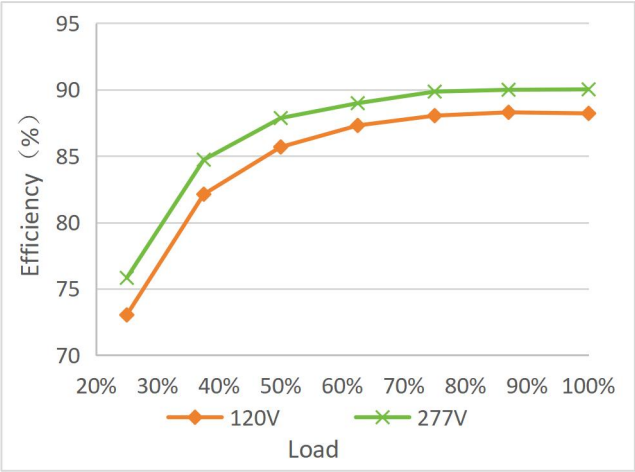

THD vs Load

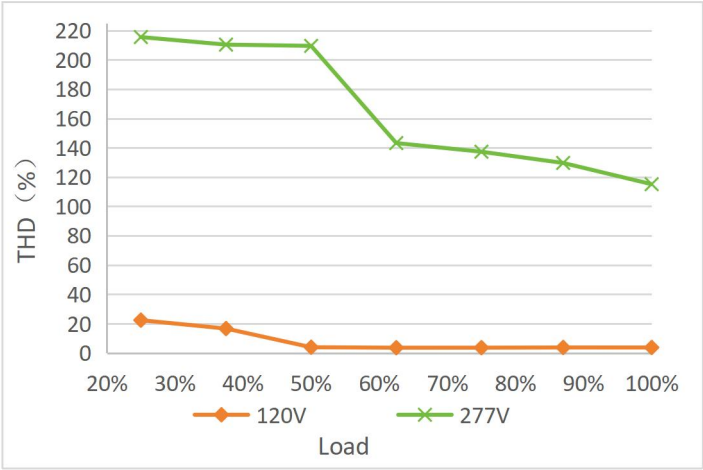

Power Factor vs Load

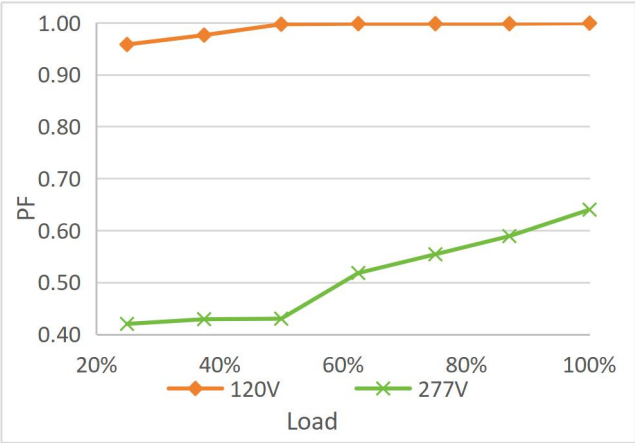

Displacement Factor vs Load

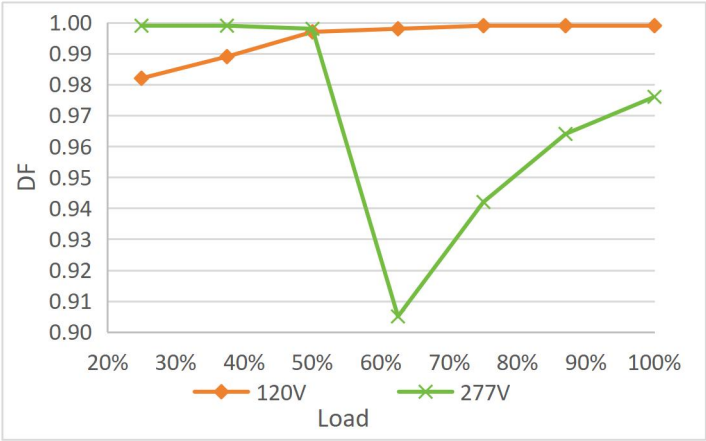

Lifespan

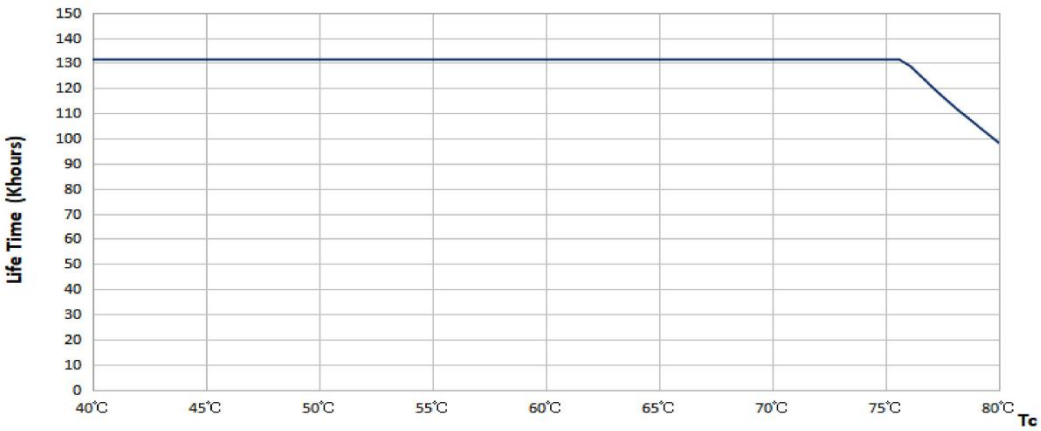

Service life

Model	Iout	Pout	Ta	50°C/122°F	55°C/131°F	60°C/140°F
GVT060A-12	5A	60W	Tc	60°C/140°F	65°C/149°F	70°C/158°F
			Lifetime	100,000h	100,000h	100,000h

Note: The design life of the LED driver is as described above under reference conditions. The failure probability is less than 10%.

The relationship between Tc and Ta also depends on the design of the luminaire.

Dimensions

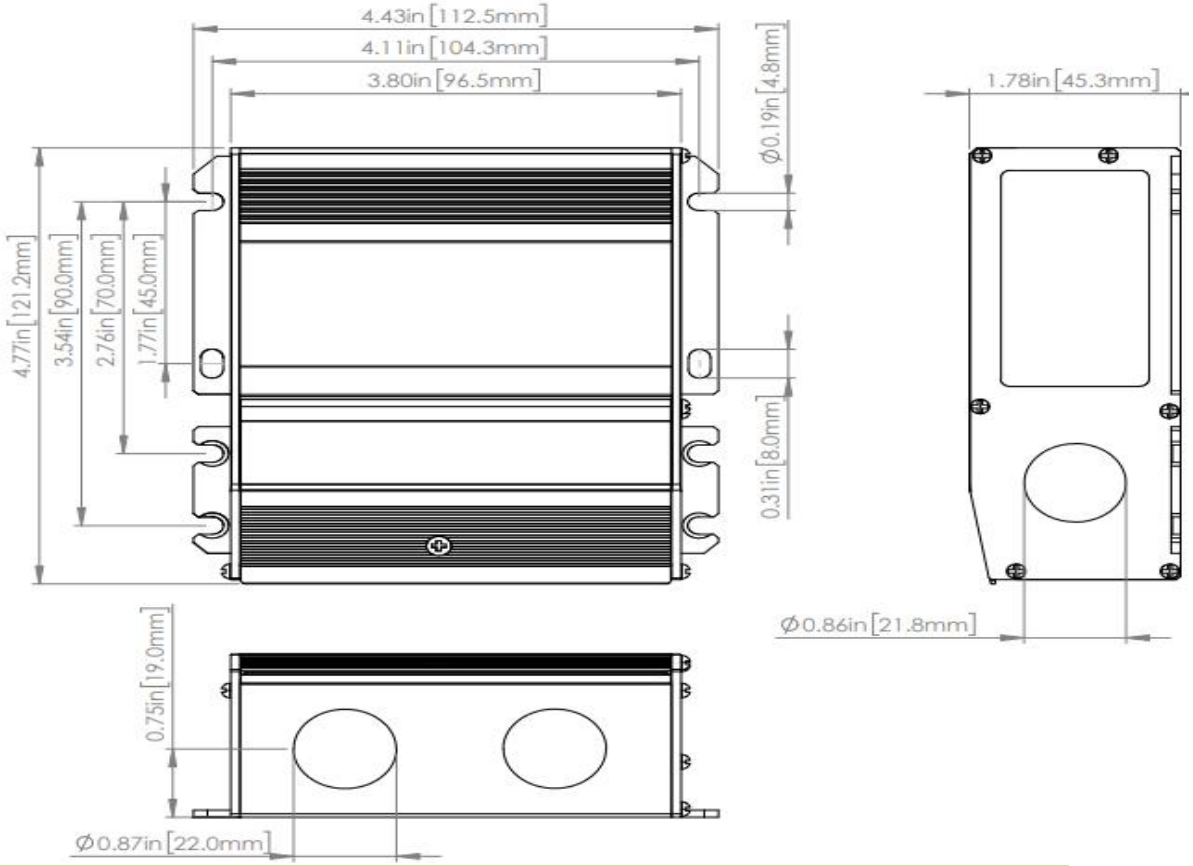

Mounting hole spacing, length	4.11±0.01 inch/104.3±0.3 mm
Product weight	1.40lb/634.4g
Cable cross-section, input & output sides	UL1015 18AWG
Cable cross-section, earth wire	UL1015 16AWG
Cable cross-section, dimming input sides	UL1015 20AWG&DIM+/DIM-
Wire preparation length	0.39±0.1 inch / 10±3 mm
Length	4.43±0.01 inch / 112.5±0.3 mm
Width	4.77±0.01 inch / 121.2±0.3 mm
Height	1.78±0.01 inch / 45.3±0.3 mm

Colors & materials

Casing material	Aluminium
Casing color	Blue

Temperature & operating conditions	
Ambient temperature range	-40 ... +50°C / -40 ... 122°F
Maximum temperature at tc test point	85°C / 185°F
Temperature range at storage	-40 ... +80°C / -40 ... 176°F (6 months in Class I environment)
Humidity range at storage	20-75%RH (no condensation)
Humidity during operation	20-95%RH (no condensation)
Atmospheric pressure	86-106kPa
RoHS	RoHS 2.0 (EU) 2015/863

Tc test point

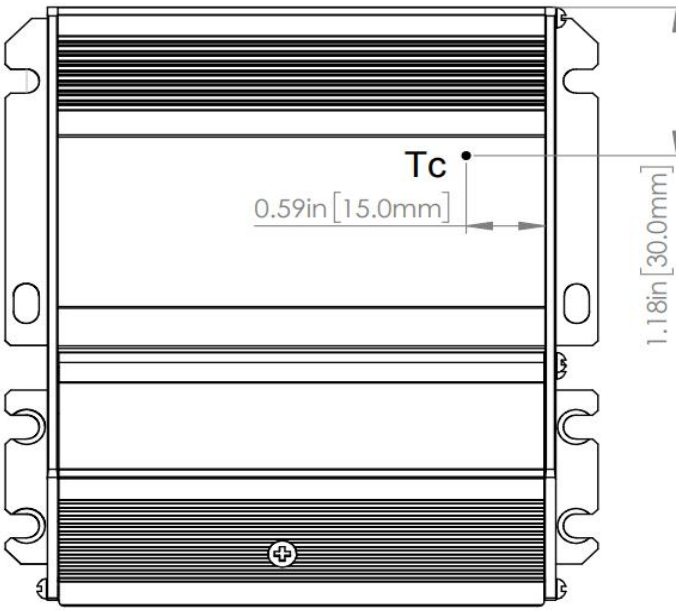

Note: Tc point is on the top of the product.

Product terminal

Input		Output	
AC-L (Black)	AC live wire input	**LED+ (Red)**	Positive terminal output of LED driver
AC-N (White)	AC neutral wire input	**LED- (Blue)**	Negative terminal output of LED driver
⏚ **(Green)**	Earth wire		
DIM+ (Purple)	Positive terminal input of 0-10V/PWM/Rx		
DIM- (Pink)	Negative terminal input of 0-10V/PWM/Rx		

Capabilities

Dimmable	0-10V/PWM/Rx/Triac dimmable
Dimming range	0 ... 100%
Overload protection	Yes

Short circuit protection	Hiccup mode [4)]
Overvoltage protection	<36V
Suitable for fixtures with prot. class	I/II
Control interface	0-10V/PWM/Rx
Number of channels	1 channel

4) Single short circuit within 60s: Self-recovery. Short circuit exceeding 60s: Latching protection; power off for ≥20s and restart to recover. Multiple short circuits with short intervals (≤10s): Timing is based on the first short circuit event.

Dimming function instructions

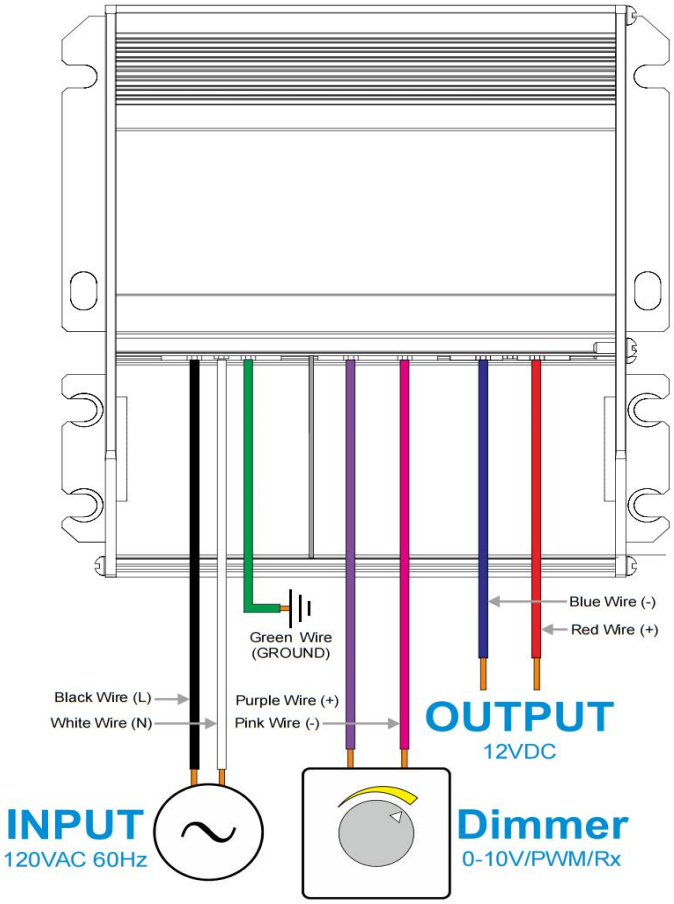

Wiring diagram of 3-in-1 dimming

- **0-10V dimming function**

① Connect 0-10V signal to DIM+/DIM-.

② In 0-10V dimming mode, when the input voltage is 0.3V±0.2V, the light turns off; when it's 0.55V±0.2V, the light turns on.

③ DIM+/- (without signal connected): 100% rated current output

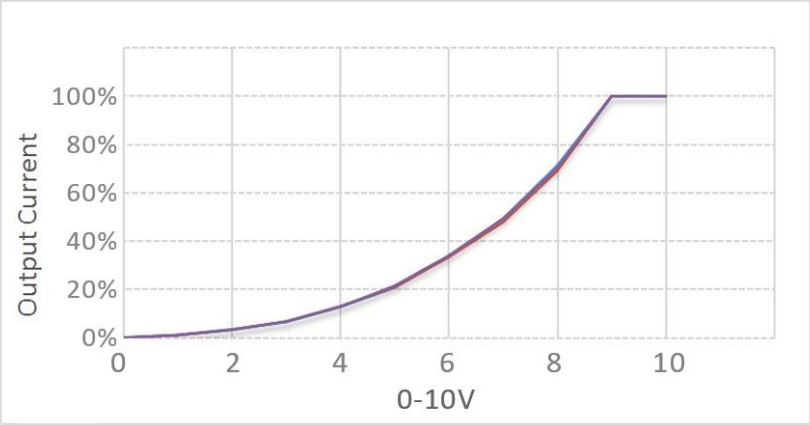

0-10V dimming

• PWM dimming function

① Connect PWM signal to the DIM+/DIM-.

② Compatible signal range: 500-3000(Hz), amplitude: 10(V)

③ DIM+/- (without signal connected): 100% rated current

④ Turn-on signal DIM+ - DIM- : 5%±1.5%

⑤ Turn-off signal DIM+ - DIM - : 3%±1.5%

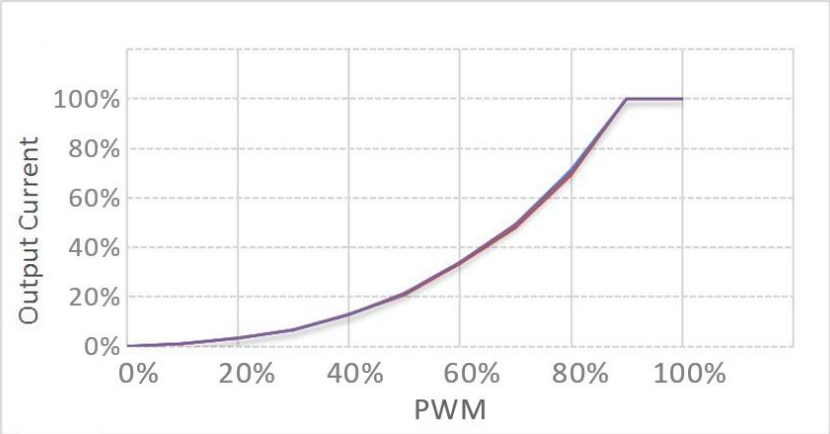

PWM dimming

• Rx dimming function

① Connect Rx signal to DIM+/DIM-.

② When the resistance is 3KΩ±1.5K, the light turns on; when it's 1KΩ±1.5K, the light turns off; range: 0-50KΩ

③ DIM+/- (without signal connected): 100% rated current

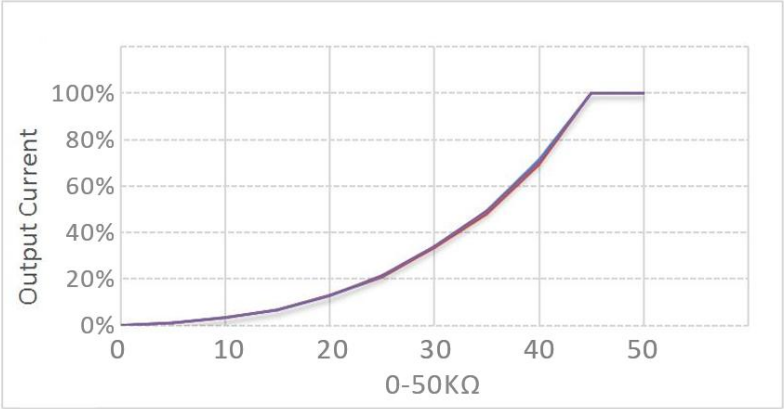

Rx dimming

• Triac dimming function

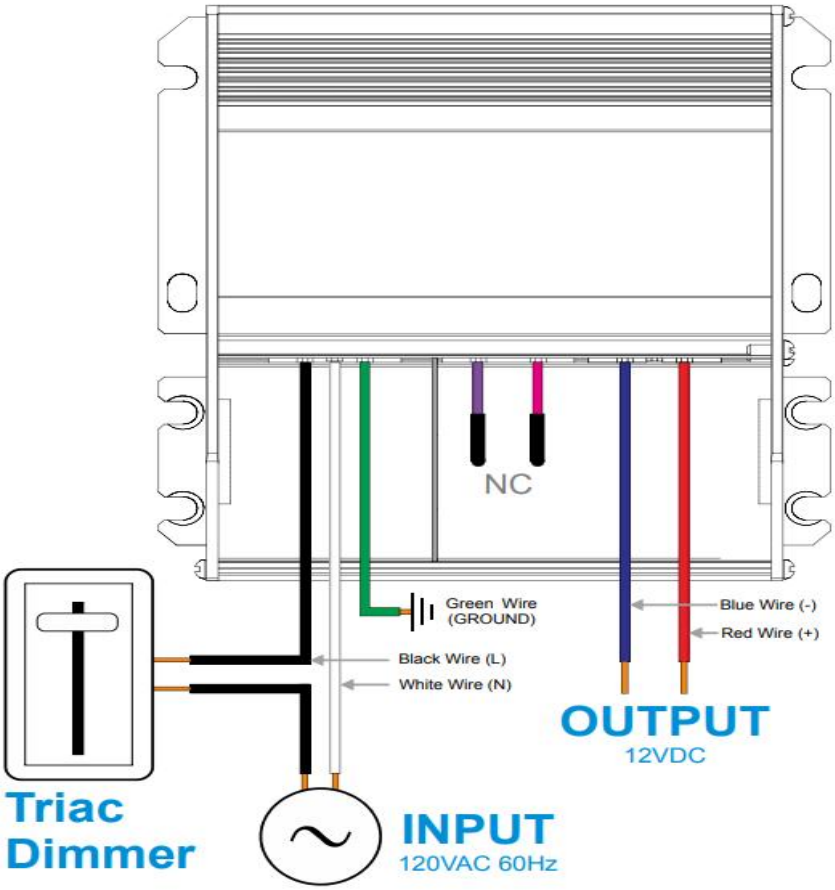

Wiring diagram of Triac dimming

① Triac dimming is only applicable for 120 Vac input.

② Triac dimming cannot be used with 0-10V/PWM/Rx dimming.

③ When using Triac dimming, it is recommended that the output load be ≥ 30% of the rated power.

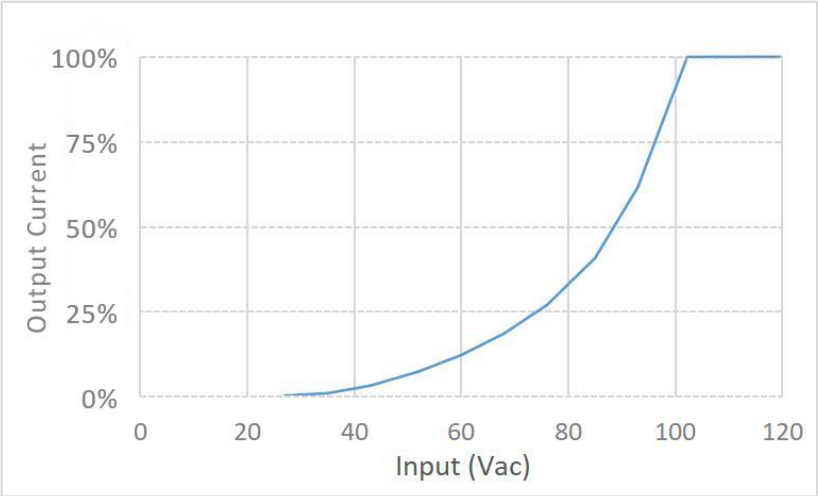

Triac dimming

Installation precautions

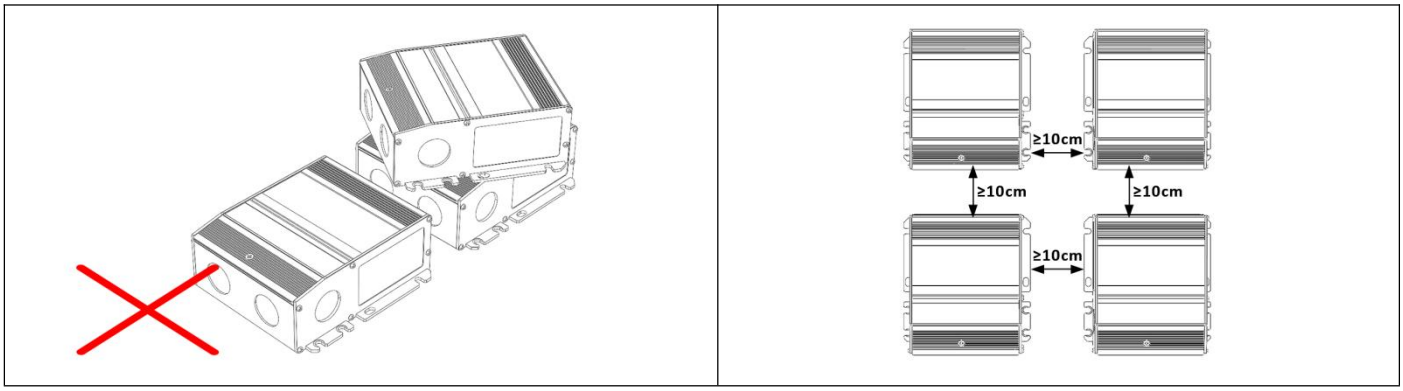

1. Do not stack the LED drivers when in use. Please maintain a minimum distance of at least 10cm between them to avoid affecting their heat dissipation and lifetime.

2. Keep a distance of at least 10cm between the LED driver and any heat source to avoid affecting the heat dissipation and lifetime of the LED driver. It is recommended to install and use the driver with the front side facing upward.

3. Proper heat dissipation must be maintained around the LED drivers to avoid affecting their lifetime.

Certificates & standards

Approval marks – approval	UL, FCC
Standards	UL 8750 UL 1310 FCC PART15B

Logistical data

Product	Packaging unit (Pieces/Unit)	Dimensions (L*W*H)	Volume	Gross weight
GVT060A-12	18	465*320*160mm 18.3*12.6*6.3inch	23 dm^3 0.81 ft^3	12.3±1kg 27.12±2lb

Test equipment & condition

Test equipment	AC power source: CHROMA6530, digital power meter: CHROMA66202, oscilloscope: Tektronix DPO3014, DC electronic load: M9712B, LED board, constant temperature and humidity chamber, lightning surge generator: Everfine EMS61000-5B, rapid group pulse generator: Everfine EMS61000-4A, spectroanalyzer: KH3935, hi-pot tester: EEC SE7440, flicker tester (flicker-free coefficient test): Everfine LFA-3000, etc.
Compatibility of dimming	LEVITON SB-742-D26HD-32B, MACL-153M-WH-C, LUTRON DVCL-153P-WH, LUTRON STCL-153M-WH, LUTRON SCL-153P-WH

If there are no special remarks, the above parameters are tested at the ambient temperature of 25℃, humidity of 50%, full load and input voltage of 120Vac/60Hz.

Additional information

1. It is recommended that user install the over voltage protection, under voltage protection and surge protection devices in the power supply circuits of light fixtures to ensure electricity safety.
2. The number of LED drivers that can be connected to a circuit breaker and the inrush current are tested under the same conditions.
3. The PC cover, casing and end cap for assembling the LED driver in the light fixture must meet the fire rating of UL94-V0 or above.
4. In no-load condition, it is recommended that user not directly connect the LED driver to the light fixture in case that the light fixture is damaged.
5. It is recommended that the AC be switched on and off at an interval of more than 6S.
6. When using Triac dimming, it is necessary to confirm the compatibility and matching of the dimmer.
7. This LED driver is suitable for connecting LED light fixtures with limited resistance current (such as LED strips). If the constant current light fixture with built-in IC is connected, it will produce tens of times the instantaneous surge current, causing the LED driver to perform overload protection.
8. If output is connected to capacitive loads, it is necessary to re-verify the feasibility.
9. The product diagram is for reference only, and the specific object shall prevail.
10. Lifud Technology Co., Ltd. reserves the right to interpret any content of this specification.

Transportation & storage

Suitable transportation means: vehicles, boats and aeroplanes.

In transit, it is necessary to prepare awnings for rain or sun protection. Moreover, please keep civilized loading and unloading to prevent the vibration or impact on LED driver as much as possible.

The storage of LED driver shall conform to the standard of Class I environment.

1. When using the products which have been stored for more than 6 months, please re-test their electrical parameters firstly by powering on. Do not use them unless they are tested to be qualified.

2. When using the products which have been stored for 6 to 12 months, please run them on power for more than 2 hours firstly.

3. When using the products which have been stored for more than 12 months, please conduct an actual assessment of quality risks firstly. Direct use is not recommended.

Cautions

Please use Lifud LED driver according to its parameters in the specification, otherwise the LED driver may malfunction.

Using any incompatible light fixtures or those that have not been certified may cause fire, explosion or other risks.

Man-made damage is beyond the scope of Lifud warranty service.

Disclaimer

Subject to change without notice. Errors and omissions excepted. Always make sure to use the most recent release.